USER GUIDE

SEG GREAT TOWER WITH LIGHTS
TE-19GT

LIST

A. Vertical Profile Connector
B. Horizontal Profile
C. Vertical Profile w/ Pre-installed LED Light strips
D. Plug and Wire
E. Tool
F. Support bar

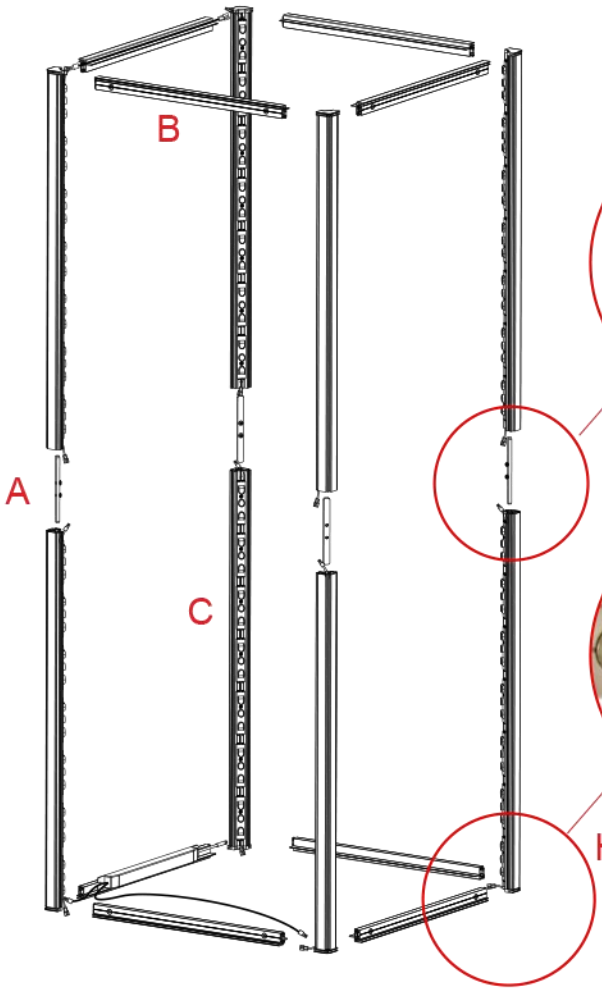

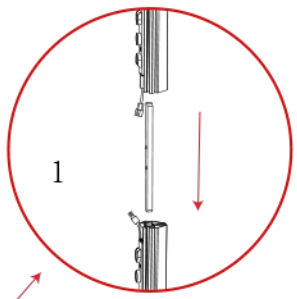

Vertical Profiles Connection

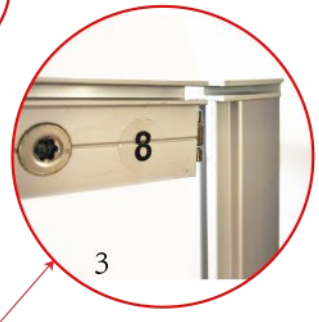

Horizontal & Vertical Profile Connection

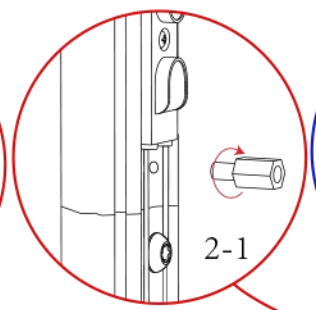

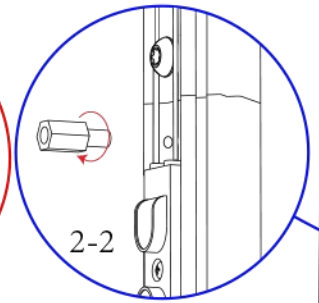

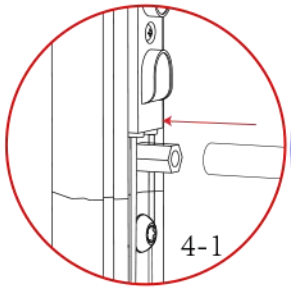

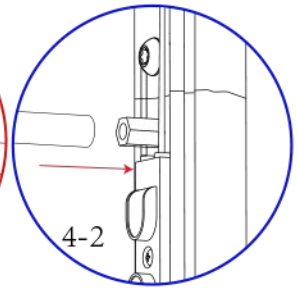

For Cross Support Bar

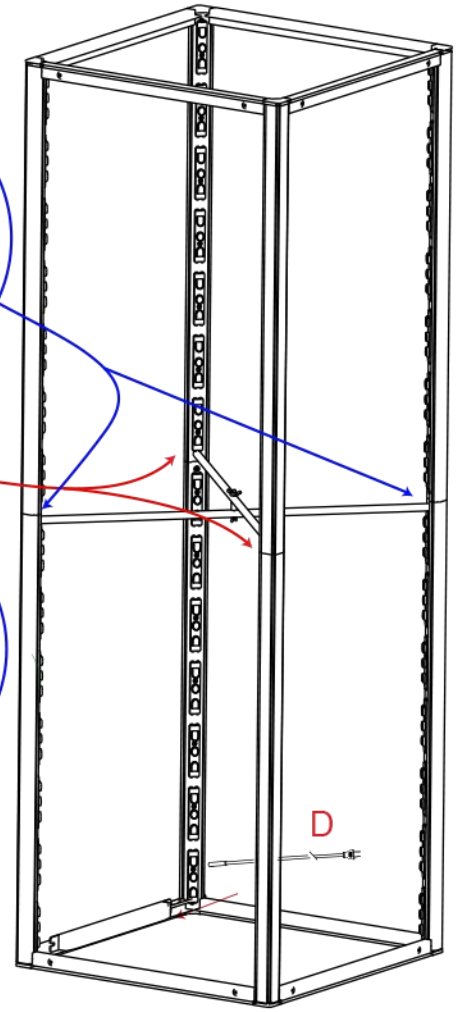

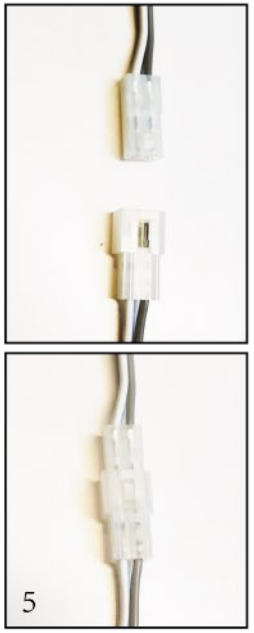

1. Assemble The Profile

2. Connect All Lights To Adapter